DWG NO. RWV45—8

REV	ECO NO.	DATE	BY	APP'D
A	REL TO PRODUCTION PER ECO 001	12/6/06	KL	

RoHS Compliant

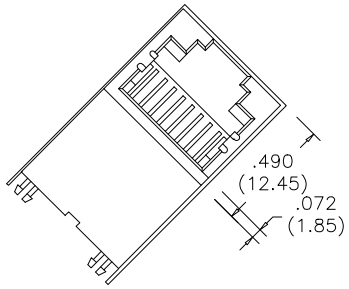

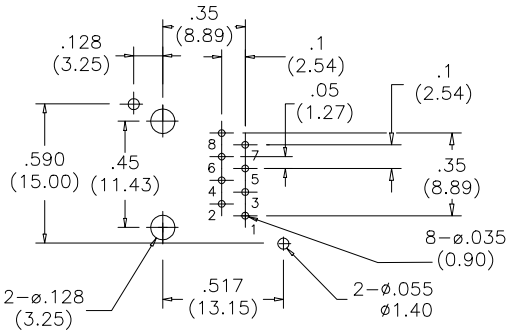

PCB Top View

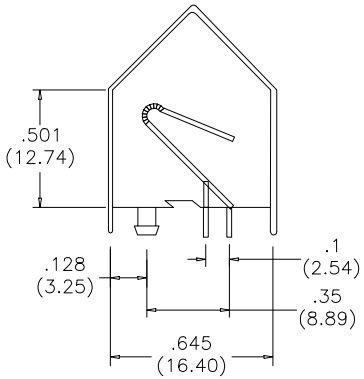

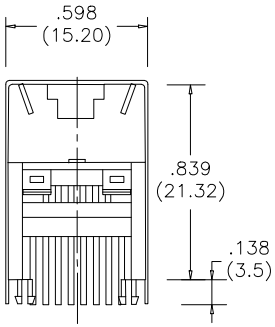

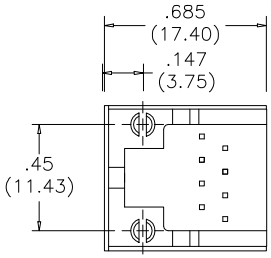

Tolerance
.XXX ± 0.10
.XX ± 0.25
.X ± 0.38
X ± 0.50

MATERIALS
Housing: Glass filled polyester UL 94V—0
Contact: Alloy #C5210, .35mm thick
Plated Gold in Contact Area: flash gold over nickel

Color: White

ELECTRICAL
Current Rating: 1.5 AMP Maximum
Voltage Rating: 150 Maximum
Dielectric Withstanding Voltage: 1500 Volts RMS
Insulation Resistance: 500 Megohms Minimum
Contact Resistance: 40 Milliohms Maximum
Operating Temperature: —40°C to +105°C

CONFIDENTIAL

© Copyright 2006 Regal Electronics, Inc. This drawing is the property of Regal Electronics and contains confidential information, trade secret information and/or know—how which is the property of Regal Electronics. By accepting this drawing, the recipient agrees not to provide, or otherwise make available, the drawing or any information or know—how embodied therein, to any third party without prior written authorization.

REGAL ELECTRONICS, INC.

DRAWN: Kim	DATE 12/6/06	TITLE: 45° entry RJ45 connector with shield
CHECKED:	DATE	
ENGINEER:	DATE	
APPROVED:	DATE	SIZE B / DRAWING NO. RWV45—8 / REV A
APPROVED:	DATE	
APPROVED:	DATE	SCALE: NONE / SHEET 1 OF 1

C-RWV45—8